Diritti riservati All rights reserved

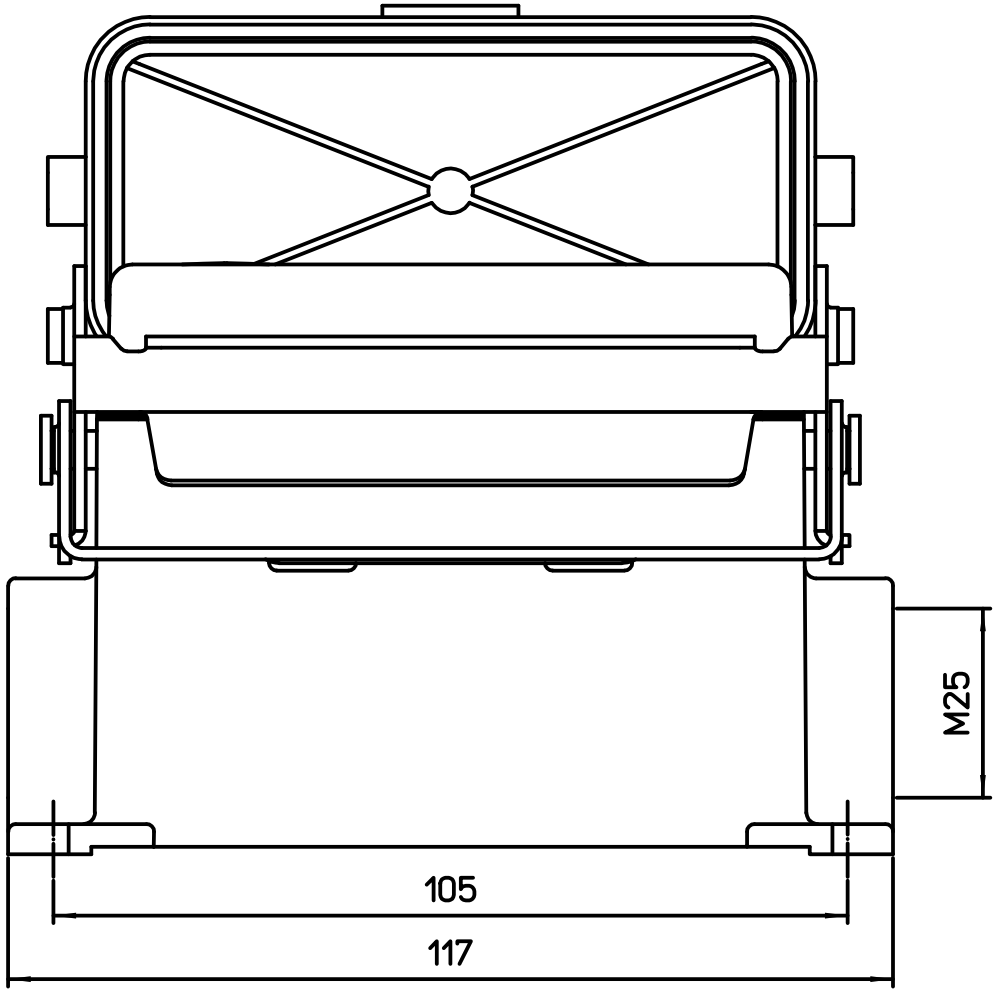

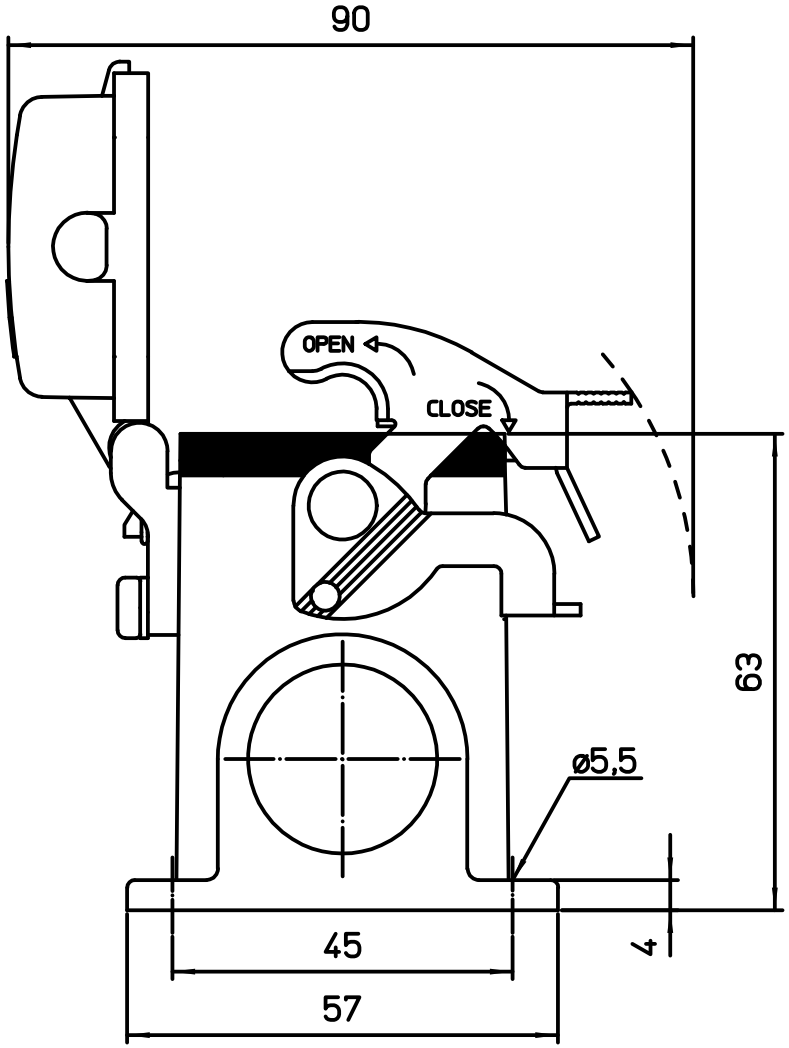

dimensions in mm	MVP 16 LSP25	Scale
Date 22/03/19	Surface mounting housings with 1L and cover, M25 - SIMPLEX	1:1
Sign. Pitasi		